BRADEN®

CH165A
CH230B

MATERIAL LIST

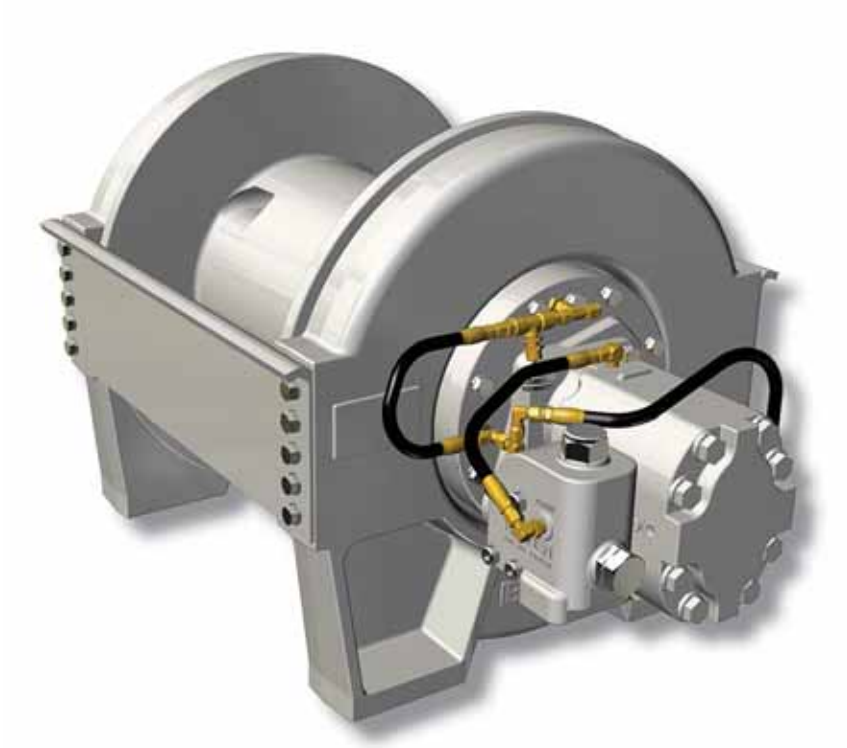

LIT2291 R7
September 2019
Printed in USA

***PACCAR* Winch**
800 E. Dallas Street
Broken Arrow, OK 74012
www.paccarwinch.com

Copyright 2019 PACCAR Inc.
All rights reserved

MODEL NUMBER AND SERIAL NUMBER

When information on a hoist is needed, always refer to the model number and serial number. Both are located on the top of the motor side end plate as indicated.

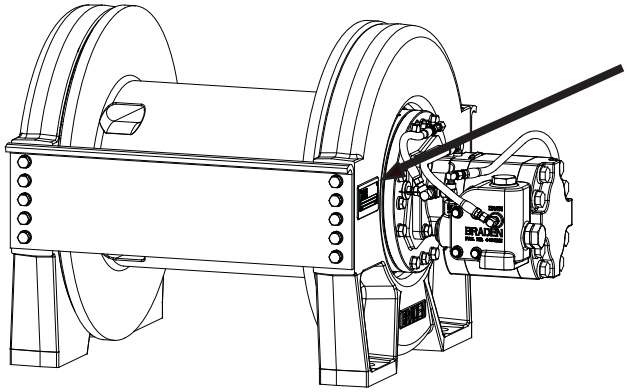

EXPLANATION OF MODEL NUMBER

CH	165	A	-	25	120	-	01	-	1
CONSTRUCTION HOIST	MAX RATING	DESIGN MODEL		GEAR RATIO	MOTOR SIZE		DRUM SIZE		OPTION

CH DESIGNATES CONSTRUCTION HOIST
165 DESIGNATES 16,500 LB FIRST LAYER LINE PULL
A DESIGNATES THE MODEL SERIES RELATING TO DESIGN CHANGES
25 DESIGNATES TOTAL GEAR REDUCTION
120 DESIGNATES HYDRAULIC MOTOR DISPLACEMENT IN CU IN/REV (DECIMAL POINT ELIMINATED EXAMPLE 110 – 11.0 CU IN/REV)
01 DESIGNATES THE DRUM OPTION
1 PERMITS TESTING AND INSPECTION PER API 2C FOR OFFSHORE CRANES

Oil Capacities - 01 Drum 16 pints (7.5 L) - 02 Drum 30 pints (14.2 L)

Capacities are approximate. Fill hoist to center of sight gauge in support endplate with drum in a horizontal position.

RECOMMENDED PLANETARY GEAR OIL

PREVAILING AMBIENT TEMPERATURE

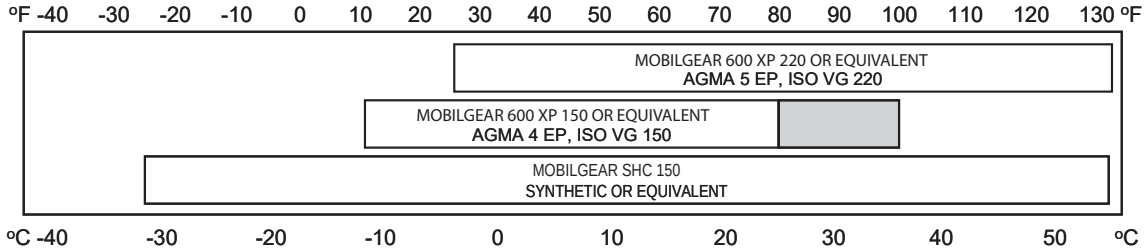

NOTE: *SHADED TEMPERATURE RANGE IN THE CHART ABOVE NOT RECOMMENDED FOR SEVERE APPLICATIONS SUCH AS: OFFSHORE CRANES, SUSTAINED FAST DUTY CYCLES OR FREQUENT LIFTING.*

Planetary hoists are factory filled with Mobilgear 600 XP 150, or equivalent. Consult your oil supplier for other equivalent oils if required.

Mobil	Shell	Chevron	Texaco
Mobilgear 600 XP 150	Omala 150	Gear Compounds EP 150	Meropa 150
Mobilgear 600 XP 220	Omala 220	Gear Compounds EP 220	Meropa 220

3RD GENERATION CH SERIES SEAL KITS 63592 - SEAL KIT WITH V-RING 63370 - SEAL KIT W/O V-RING		
DESCRIPTION	**PART NO.**	**QTY.**
O-RING	100589	1
OIL SEAL	107297	1
OIL SEAL	70167	1
SEAL, U-CUP	103441	1
O-RING	22357	1
BACK-UP WASHER	77278	1
O-RING	13017	1
O-RING	25366	1
O-RING	10330	1
O-RING	13542	1
O-RING	21150	1
O-RING	24773	1
O-RING	106203	1
O-RING	10052	1
O-RING	13838	1
O-RING (in 63370 kit only)	25591	1
V-RING SEAL (in 63592 kit only)	103393	1
V-RING SEAL (in 63592 kit only)	103380	1

64587 BRAKE DISC PACK		
DESCRIPTION	**PART NO**	**QTY**
BRAKE DISC	102954	8
FRICTION DISC	103167	7
BRAKE SPRING	24108	18

64588 BEARING KIT		
DESCRIPTION	**PART NO**	**QTY**
BALL BEARING	24486	1
BALL BEARING	24487	1
THRUST WASHER	24485	1
THRUST WASHER	29512	1
THRUST BEARING	24167	6
ROLLER BEARING	24579	3
SPIROL PIN	24113	3
PRIMARY PLANET GEAR SHAFT	26295	3
THRUST WASHER	103681	6
SPIROL PIN	24582	3
SPACER, BEARING	103682	9
ROLLER	103683	132
OUTPUT PLANET SHAFT	105632	3

CH165A AND CH230B MAIN ASSEMBLY

MISCELLANEOUS PARTS GROUP

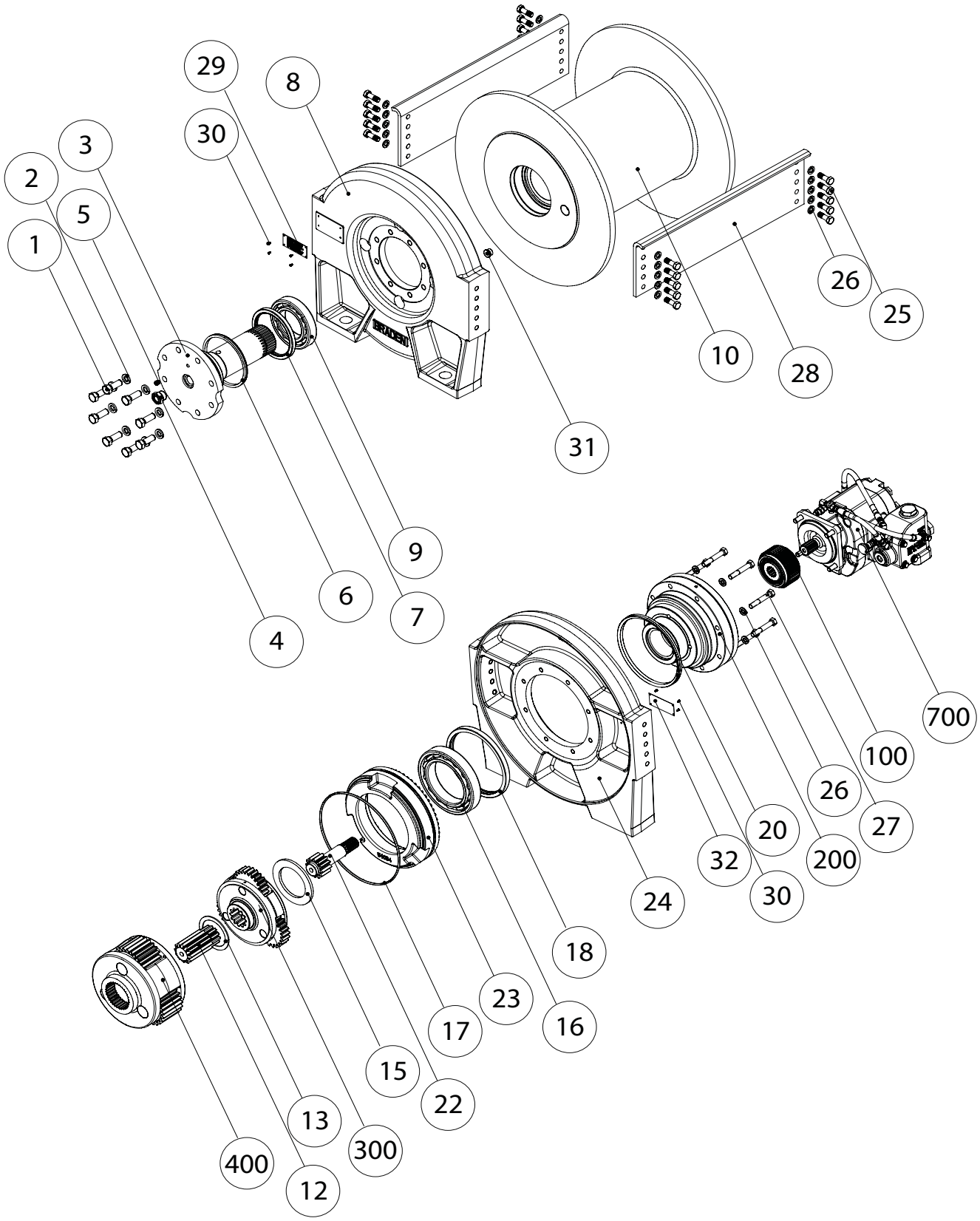

MISCELLANEOUS PARTS GROUP

ITEM NO.	PART NO.	DESCRIPTION	QTY			
			CH165A		CH230B	
			25:1 RATIO	26:1 RATIO	35:1 RATIO	36:1 RATIO
1	103249	CAPSCREW (5/8 - 11 X 1 3/4 GD8 Z)	8	8	8	8
2	102423	LOCKWASHER (5/8)	8	8	8	8
3	103370	BEARING SUPPORT	1	---	1	---
	105752	BEARING SUPPORT	---	1	---	1
4	70193	SIGHT GAUGE	1	1	1	1
5	18062	VENT	1	1	1	1
6	103380	V-RING SEAL	1	1	1	1
7	107297	SEAL	1	1	1	1
8	103353	END PLATE, SUPPORT END	1	1	1	1
9	24486	BEARING	1	1	1	1
10	103351	CABLE DRUM	1	---	1	---
	105750	CABLE DRUM	---	1	---	---
	105751	CABLE DRUM	---	---	---	1
12	24571	OUTPUT SUN GEAR	1	1	1	1
13	24485	THRUST WASHER	1	1	1	1
15	29512	THRUST WASHER	1	1	1	1
16	24487	BEARING	1	1	1	1
17	24773	O-RING	1	1	1	1
18	70167	SEAL	1	1	1	1
20	103393	V-RING SEAL	1	1	1	1
22	103397	PRIMARY SUN GEAR	1	---	---	---
	105763	PRIMARY SUN GEAR	---	1	---	---
	103374	PRIMARY SUN GEAR	---	---	1	---
	105762	PRIMARY SUN GEAR	---	---	---	1
23	103375	CABLE DRUM CLOSURE	1	---	1	---
	105755	CABLE DRUM CLOSURE	---	1	---	1
24	103352	END PLATE, MOTOR END	1	1	1	1
25	103314	CAPSCREW (1/2 - 13 X 1 1/2 GD8 Z)	20	20	20	20
26	11026	LOCKWASHER (1/2)	28	28	28	28
27	102347	CAPSCREW (1/2 - 13 X 3 GD8 Z)	8	8	8	8
28	103406	TIE PLATE	2	---	2	---
	105767	TIE PLATE	---	2	---	---
	105766	TIE PLATE	---	---	---	2
29	103501	APPROVAL PLATE	1	1	1	1
30	11842	DRIVE SCREW	8	8	8	8
31	32411	PLUG	1	1	1	1
32	NSS	NAMEPLATE	1	1	1	1
33	24569	RING GEAR ADAPTER	---	1	---	1
34	29747	RING GEAR	---	1	---	1
35	24493	CABLE WEDGE (1/2 - 5/8 CABLE DIA.) (NOT SHOWN)	1	1	1	1
	24494	CABLE WEDGE (3/4 - 1 CABLE DIA.) (NOT SHOWN)	A/R	A/R	A/R	A/R
100	---	OVERRUNNING BRAKE CLUTCH (REFER TO PAGE 7)	1	1	1	1
200	82956	BRAKE CYLINDER ASSEMBLY (REFER TO PAGE 9)	1	---	1	---
	82930	BRAKE CYLINDER ASSEMBLY (REFER TO PAGE 9)	---	1	---	1
300	82954	PRIMARY PLANET CARRIER ASSEMBLY (REFER TO PAGE 7)	1	1	---	---
	83023	PRIMARY PLANET CARRIER ASSEMBLY (REFER TO PAGE 7)	---	---	1	1
400	83337	OUTPUT PLANET CARRIER ASSEMBLY (REFER TO PAGE 8)	1	---	1	---
	83361	OUTPUT PLANET CARRIER ASSEMBLY (REFER TO PAGE 8)	---	1	---	1
700	---	HYDRAULIC MOTOR ASSEMBLY (REFER TO PAGE 12-15)	1	1	1	1

NOTE: NSS - NOT SERVICED SEPARATELY
A/R - AS REQUIRED
STANDARD HOIST IS PROVIDED WITH 24493 CABLE WEDGE. ORDER 24494 SEPARATELY AS REQUIRED.

SEAL KIT #63592

DESCRIPTION	PART NO	QTY
O-RING	100589	1
SEAL, OIL	107297	1
SEAL	70167	1
O-RING	22357	1
BACK-UP WASHER	77278	1
O-RING	13017	1
O-RING	25366	1
O-RING	10330	1
V-RING SEAL	103393	1
V-RING SEAL	103380	1
O-RING	13542	1
O-RING	21150	1
O-RING	24773	1

CH165A AND CH230B MAIN ASSEMBLY

MISCELLANEOUS PARTS GROUP, AUX BRAKE UNITS

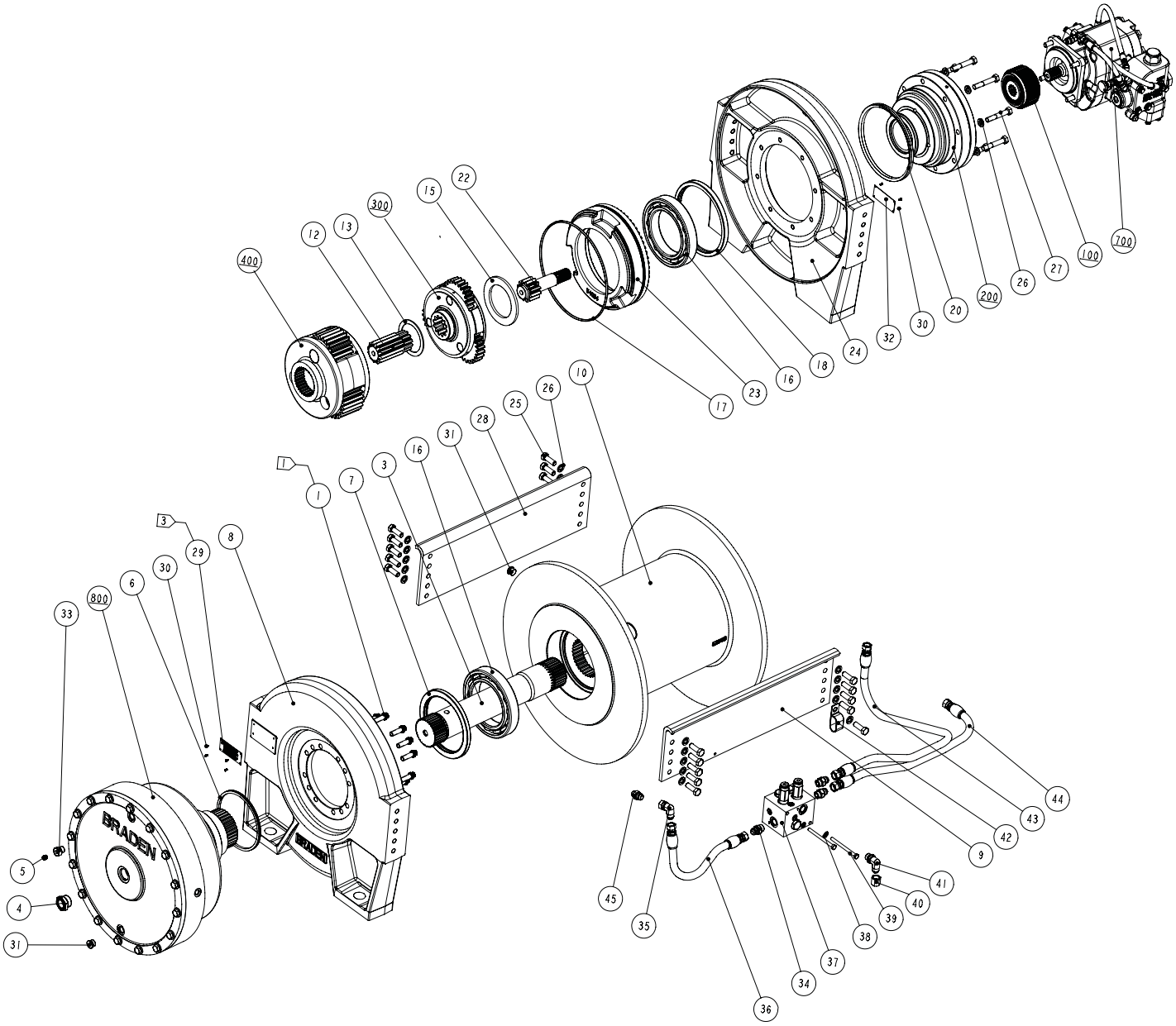

MISCELLANEOUS PARTS GROUP

ITEM NO.	DESCRIPTION	PART NO.	QTY.
-	MISC. PARTS GROUP	(63736)	
1	Capscrew 12 PT (1/2 - 13 X 1-3/4 GD8 Z)	102475	12
3	Support Shaft	104396	1
4	Sight Gauge	25958	1
5	Relief Valve	18062	1
6	V-Ring Seal	104908	1
7	Seal, Lip	104182	1
8	End Plate Support	104398	1
9	Tie Plate	105725	1
10	Cable Drum	104408	1
12	Output Sun Gear	24571	1
13	Thrust Washer	24485	1
15	Thrust Washer	29512	1
16	Ball Bearing	24487	2
17	O-Ring	24773	1
18	Seal	70167	1
20	V-Ring Seal	103393	1
22	Primary Sun Gear	103374	1
23	Drum Closure	103375	1
24	End Plate Motor	103352	1
25	Capscrew (1/2 - 13 X 1-1/2 NC GD8 Z)	103314	20
26	Lockwasher (1/2)	11026	28
27	Capscrew (1/2 - 13 X 3 NC GD8 Z)	102347	8
28	Tie Plate	103406	1
29	Approval Plate	103501	1
30	Drive Screw	11842	8
31	Plug, O-Ring Flush	32411	2
32	Nameplate	NSS	1
33	Reducer Str Thd Adapter	26868	1
34	Adapter	70100	3
35	Elbow, 90 Deg Swivel	29046	1
36	Hose Assy	29676	1
37	Valve, Combination	108340	1
38	Lockwasher (5/16)	11024	2
39	Capscrew (5/16 - 18 x 4 GD8 Z)	104307	2
40	Cap	29908	1
41	16146-88 90 Male Elbow	70109	1
42	Clip, Double	PA6D7573	1
43	Hose Assy	40102	1
44	Hose Assy	100802	1
45	Adapter	105274	1

NSS - NOT SERVICED SEPARATELY

OVERRUNNING CLUTCH ASSEMBLY

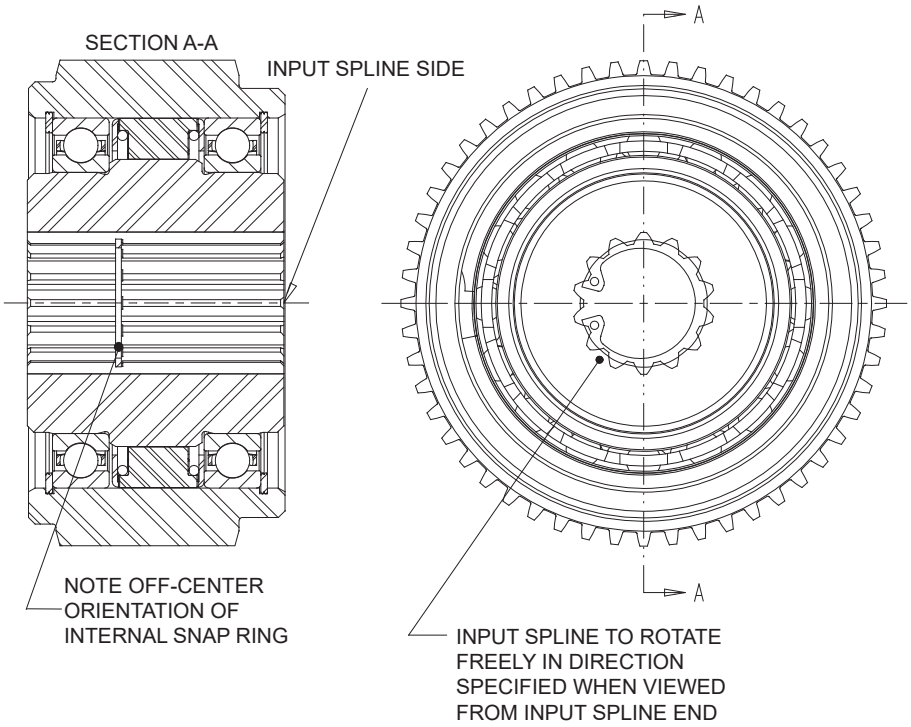

DRUM ROTATION	DESCRIPTION	INNER RACE FREE ROTATION	APPLICATION	PART NO
CCW (STD)	SAE C 14T	CW	25:1 RATIO (STD ROT)	83148
		CW	35:1 RATIO (STD ROT)	
		CCW	26:1 RATIO (STD ROT)	82908
		CCW	36:1 RATIO (STD ROT)	
CW (U/W)	SAE C 14T	CCW	25:1 RATIO (U/W ROT)	82908
		CCW	35:1 RATIO (U/W ROT)	
		CW	26:1 RATIO (U/W ROT)	83148
		CW	36:1 RATIO (U/W ROT)	
CCW (STD)	SAE D 13T	CW	25:1 RATIO (STD ROT)	82907
		CW	35:1 RATIO (STD ROT)	
		CCW	26:1 RATIO (STD ROT)	83170
		CCW	36:1 RATIO (STD ROT)	
CW (U/W)	SAE D 13T	CCW	25:1 RATIO (U/W ROT)	83170
		CCW	35:1 RATIO (U/W ROT)	
		CW	26:1 RATIO (U/W ROT)	82907
		CW	36:1 RATIO (U/W ROT)	

OVERRUNNING CLUTCH ASSEMBLY

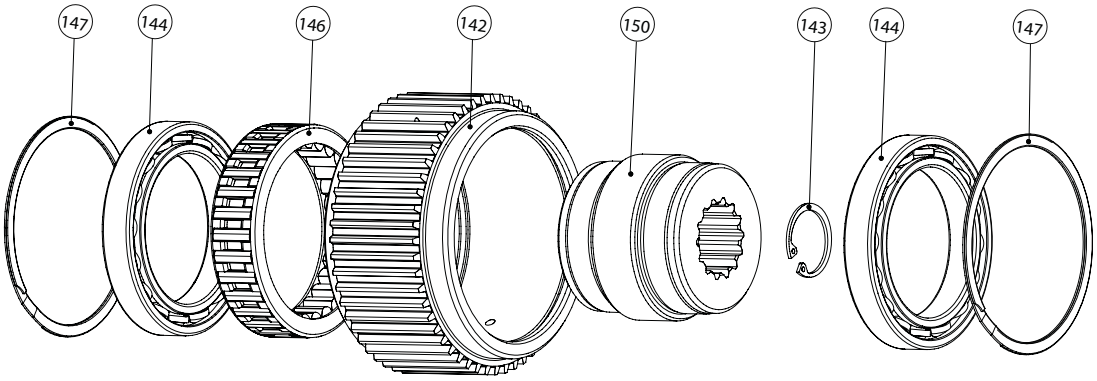

ITEM NO.	DESCRIPTION	PART NO.	QTY.	
			SAE C	SAE D
100	OVERRUNNING CLUTCH ASSY	83148		
142	OUTER RACE	NSS	1	1
143	RETAINING RING	24506	1	-
143	RETAINING RING	28734	-	1
144	BALL BEARING	103104	2	2
146	OVERRUNNING CLUTCH	NSS	1	1
147	RETAINING RING	103110	2	2
150	INNER RACE (14T SPLINE)	NSS	1	-
150	INNER RACE (13T SPLINE)	NSS	-	1

PRIMARY PLANET CARRIER ASSEMBLY

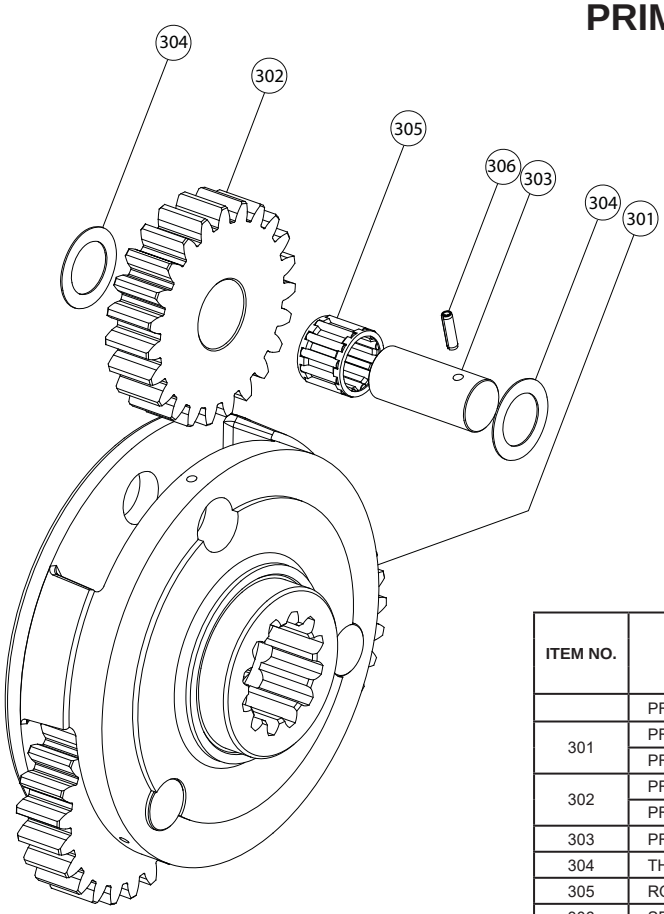

ITEM NO.	DESCRIPTION	PART NO.	QTY.	
			25:1 RATIO	35:1 RATIO
			26:1 RATIO	36:1 RATIO
	PRIMARY PLANET CARRIER ASSY	(82954)		
301	PRIMARY PLANET CARRIER	103396	1	-
	PRIMARY PLANET CARRIER	26293	-	1
302	PRIMARY PLANET GEAR	103398	3	-
	PRIMARY PLANET GEAR	24575	-	3
303	PRIMARY PLANET GEAR SHAFT	26295	3	3
304	THRUST BEARING	24167	6	6
305	ROLLER BEARING	24579	3	3
306	SPIROL PIN	24113	3	3

OUTPUT PLANET CARRIER ASSEMBLY

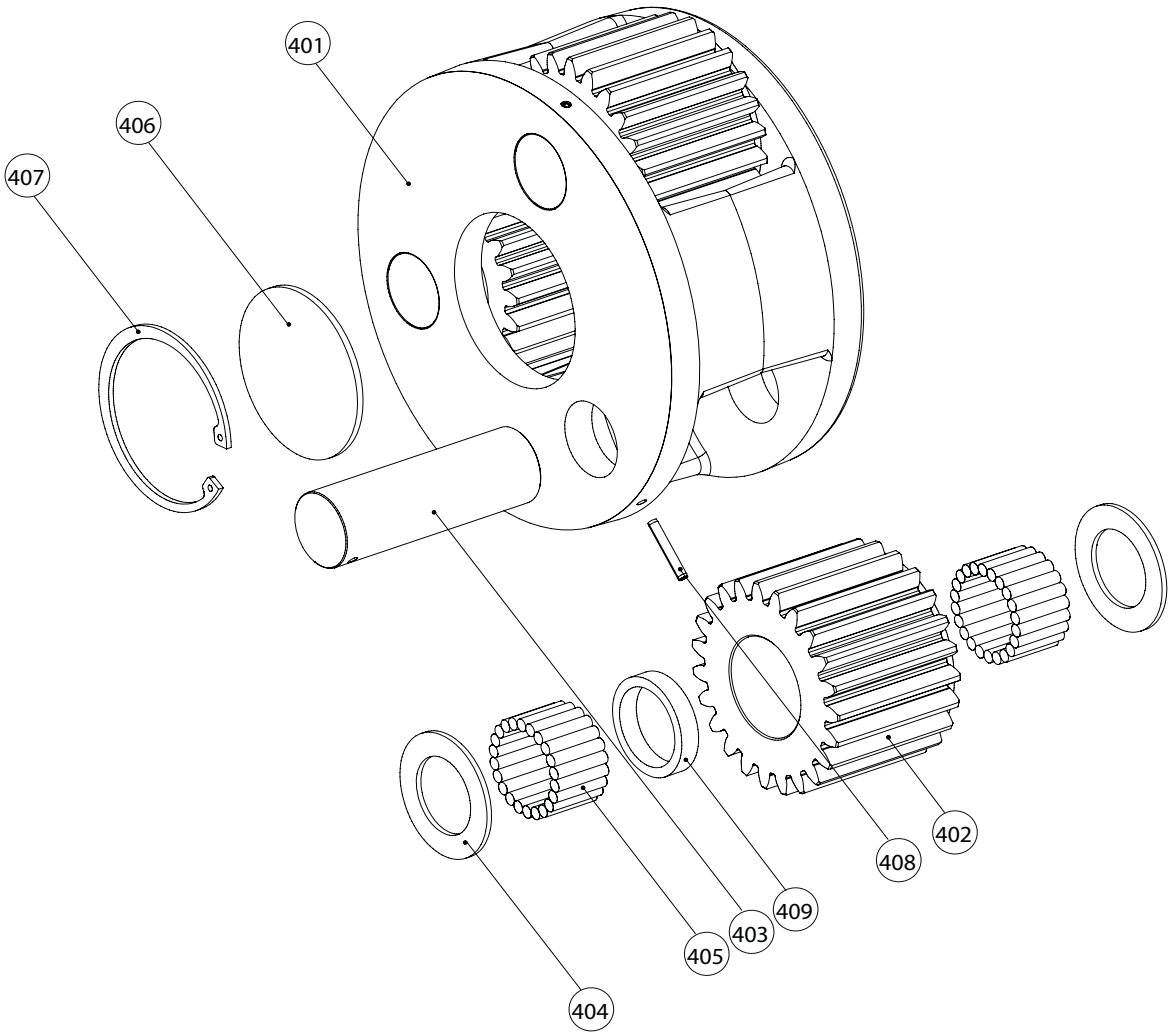

ITEM NO.	DESCRIPTION	PART NO	QTY.	
			25:1 RATIO 35:1 RATIO	26:1 RATIO 36:1 RATIO
401	PLANET CARRIER	105634	1	-
	PLANET CARRIER	105760	-	1
402	PLANET GEAR	105633	3	3
403	PLANET GEAR SHAFT	105632	3	3
404	THRUST WASHER	103681	6	6
405	ROLLER	103683	132	132
406	THRUST PLATE	101971	1	-
407	RETAINING RING	101972	1	-
408	SPIROL PIN	24582	3	3
409	BEARING SPACER	103682	9	9

BRAKE SUB-ASSEMBLY

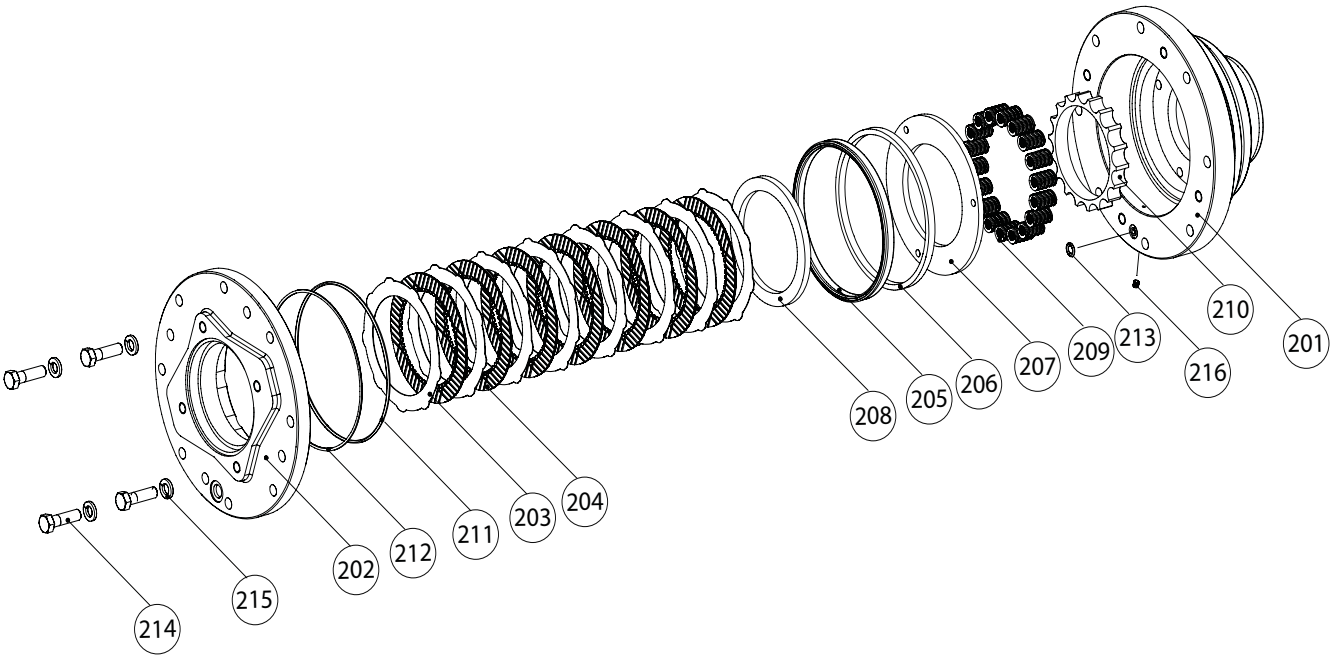

ITEM NO.	DESCRIPTION	PART N0.	QTY.
	BRAKE SUB ASSY	(82956)	
201	BRAKE CYLINDER	103404	1
202	MOTOR ADAPTER - SAE-C, 4-BOLT	103035	1 (OPT)
202	MOTOR ADAPTER - SAE-D, 4-BOLT	103045	1 (OPT)
203	BRAKE DISC	102954	8
204	FRICTION DISC	103167	7
205	SEAL, U-CUP	103441	1
206	PISTON BACK-UP RING	25746	1
207	PRESSURE PLATE	103168	1
208	BRAKE PLATE SPACER	103169	1
209	BRAKE SPRING	24108	18
210	SPRING SPACER	103147	1
211	O-RING	22357	1
212	58933 BACK-UP WASHER	77278	1
213	O-RING	13017	1
214	CAPSCREW (1/2 - 13 X 1 3/4 NC GD8)	104323	4
215	LOCKWASHER (1/2”)	11026	4
216	EXPANSION PLUG	103379	1

AUXILIARY BRAKE GROUP

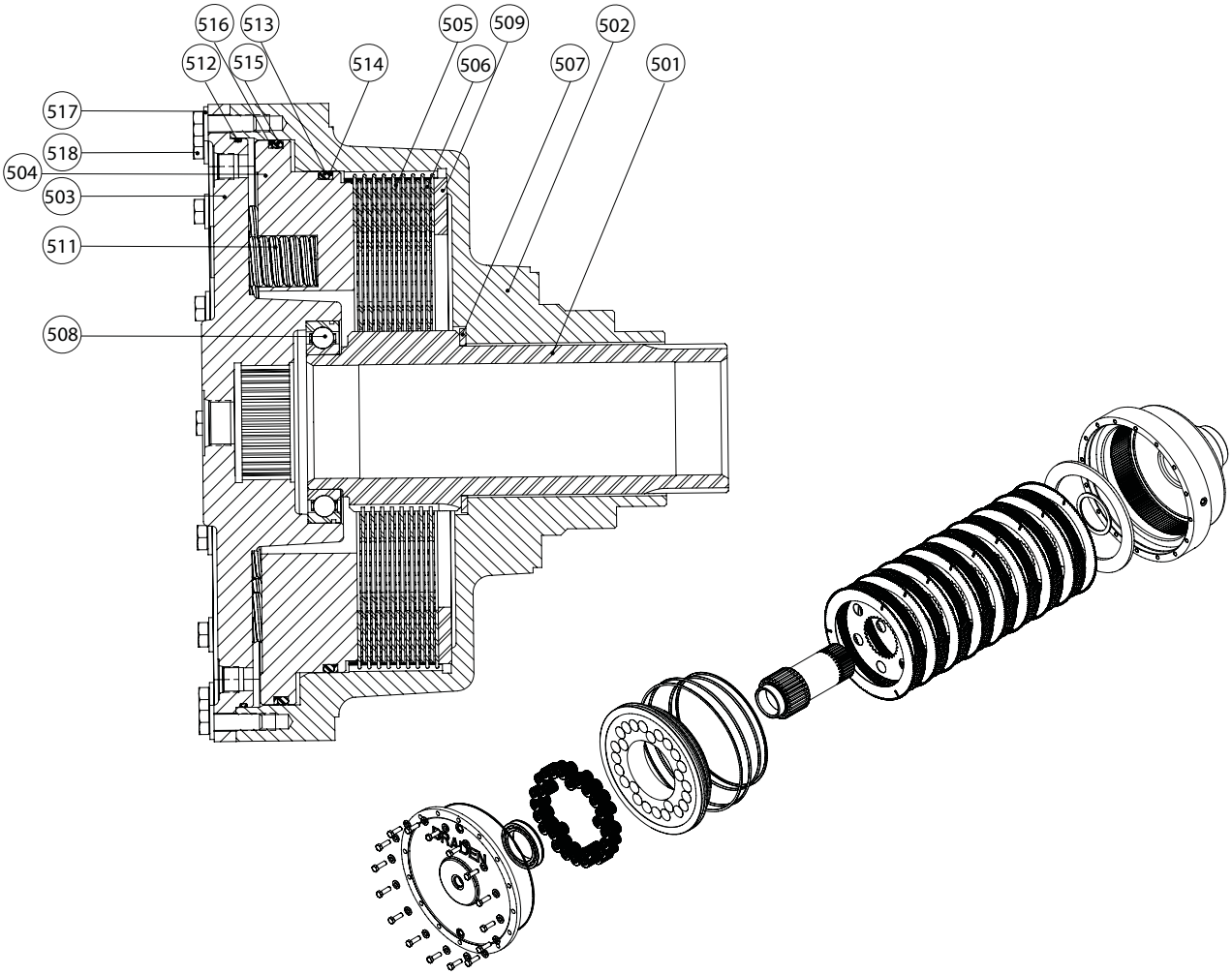

ITEM NO.	DESCRIPTION	PART NO.	QTY.
	AUXILIARY BRAKE	(83180)	
501	BRAKE SHAFT	104157	1
502	BRAKE HOUSING	104419	1
503	HOUSING COVER	104406	1
504	PISTON	104159	1
505	50497 DIVIDER PLATE	72204	9
506	54487 BRAKE PLATE	73164	8
507	WASHER, THRUST	28727	1
508	BEARING, BALL	105637	1
509	SPACER	29757	1
511	SPRING, DIE	104168	25
512	O-RING	72113	1
513	O-RING	26459	1
514	BACK-UP, O-RING	29857	1
515	O-RING	29856	1
516	BACK-UP, O-RING	29858	1
517	WASHER	100859	16
518	CAPSCREW (1/2 - 13 X 1 1/2 NC GD8)	104322	16

BRAKE VALVE GROUP
STANDARD CONFIGURATION ONLY

ITEM NO.	DESCRIPTION	PART NO. 25:1 12.0 Motor 01 Drum	PART NO. 35:1 12.0 Motor 01 Drum	PART NO. 35:1 12.8 Motor 01 Drum	PART NO. 35:1 12.1 Motor 01P Drum	PART NO. 26:1 12.0 Motor 02 Drum	QTY.
	MISC PARTS GROUP	(63367)	(63729)	(63329)	(63754)	(06751)	
1	CAPSCREW (9/16 - 12 X 1 3/4 NC GD8)	103249	103249	103249	103249	103249	8
2	LOCKWASHER (9/16")	102423	102423	102423	102423	102423	8
3	BEARING SUPPORT	103370	103370	103370	103370	105752	1
4	16574-0012 SIGHT GAUGE	70193	70193	70193	70193	70193	1
5	RELIEF VALVE 7.5-15 PSI	18062	18062	18062	18062	18062	1
6	V-RING SEAL	103380	103380	103380	103380	103380	1
7	SEAL-OIL	23834	23834	23834	23834	23834	1
8	END PLATE SUPPORT	103353	103353	103353	103353	103353	1
9	BALL BEARING	24486	24486	24486	24486	24486	1
10	CABLE DRUM	103351	103351	103351	83355	105750	1
12	OUTPUT SUN GEAR	24571	24571	24571	24571	24571	1
13	THRUST WASHER	24485	24485	24485	24485	24485	1
15	THRUST WASHER	29512	29512	29512	29512	29512	1
16	BALL BEARING	24487	24487	24487	24487	24487	1
17	O-RING	24773	24773	24773	24773	24773	1
18	16342-26 SEAL	70167	70167	70167	70167	70167	1
20	V-RING SEAL	103393	103393	103393	103393	103393	1
22	PRIMARY SUN GEAR	103397	103374	103374	103374	105763	1
23	DRUM CLOSURE	103375	103375	103375	103375	105755	1
24	END PLATE, MOTOR	103352	103352	103352	103352	103352	1
25	CAPSCREW (1/2 - 13 X 1 1/2 NC GD8)	103314	103314	103314	103314	103314	20
26	LOCKWASHER (1/2")	11026	11026	11026	11026	11026	28
27	CAPSCREW (1/2 - 13 X 3 NC GD8)	102347	102347	102347	102347	102347	8
28	TIE PLATE	103406	103406	103406	103406	105767	2
29	APPROVAL PLATE	103501	103501	103501	103501	103501	1
30	DRIVE SCREW	11842	11842	11842	11842	11842	8
31	16496-8 PLUG,O-RING FLUSH	32411	32411	32411	32411	32411	1
32	NAMEPLATE	76381	76381	76381	76381	76381	1
33	RING GEAR ADAPTOR (NS)	---	---	---	---	24569	1
34	RING GEAR (NS)	---	---	---	---	29747	1

ITEM NO.	DESCRIPTION	PART NO.	QTY.
	1-1/2" BRAKE VALVE ASSY	(81609)	
601	BRAKE VALVE HOUSING	24418	1
602	VALVE SPRING RETAINER	24424	1
603	SPRING RETAINER	101016	1
604	PLUG	24420	1
605	BRAKE VALVE PISTON	24419	1
606	DAMPER PISTON	24425	1
607	DAMPER PISTON EXTENSION	101017	1
608	CHECK VALVE POPPET	24423	1
609	SHIPPING PLUG	25036	2
610	REDUCER	24436	1
611	BALL, STEEL	24428	1
612	CHECK VALVE SPRING	24190	1
613	MAIN PISTON SPRING	24434	1
614	O-RING	24186	2
615	BACK-UP RING	24778	1
616	O-RING	24776	1
617	BACK-UP RING	24777	1
618	O-RING	21123	1
619	PIPE PLUG	18009	2
620	CHECK SPRING	25373	1
621	SHIM, VALVE SPRING	25662	1
622	SPRING SEAT	101015	1

BRAKE VALVE SEAL KIT #61616

DESCRIPTION	PART NO	QTY
O-RING	24776	1
O-RING	21123	1
O-RING	24186	3
BACK-UP RING	24777	1
BACK-UP RING	24778	1
O-RING	13542	1

HYDRAULIC MOTOR GROUP
CH165A AND CH230B EQUIPPED WITH AUXILIARY BRAKE
SEAL KIT #75652

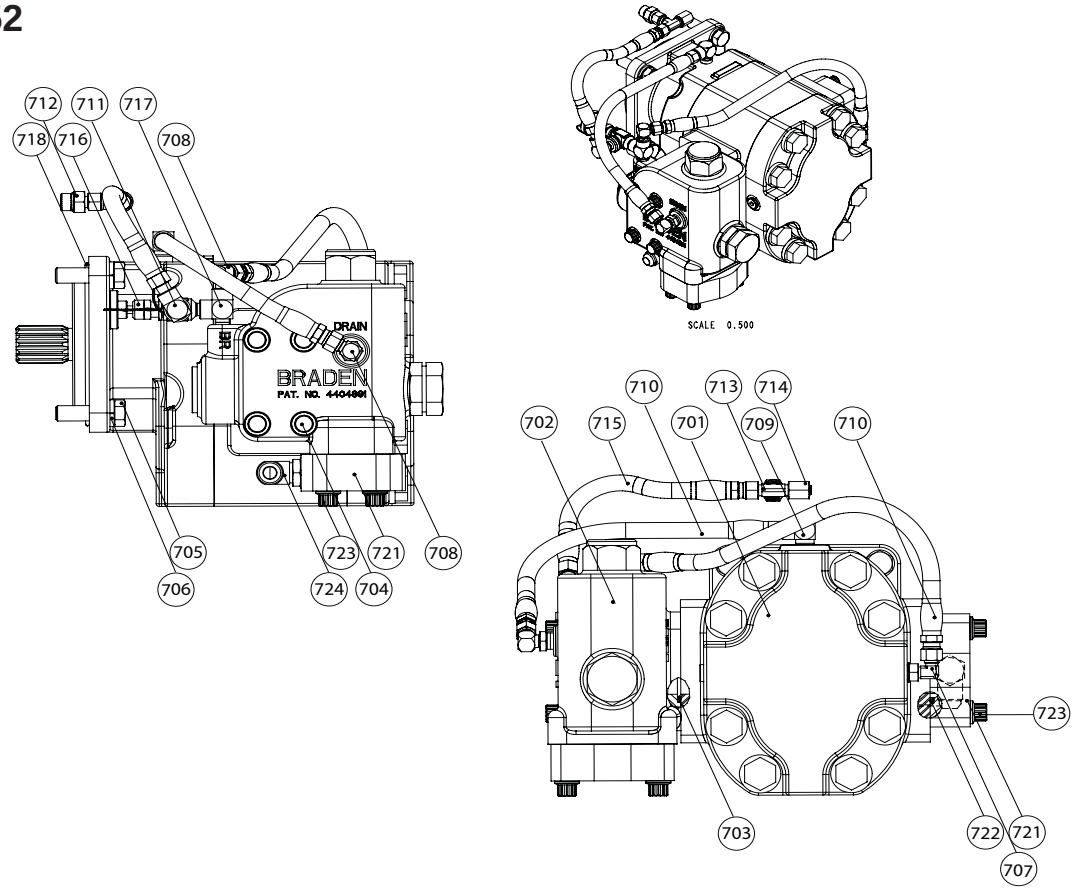

ITEM NO.	DESCRIPTION	PART NO.	QTY.
	HYD MOTOR GROUP	(63732)	
701	HYD MOTOR WM 76 12.03 CU IN	25274	1
702	1-1/2” BRAKE VALVE ASSY	83133	1
703	O-RING	13542	1
704	CAPSCREW, HEX HEAD (1/2 - 13 x 4-1/2 GD8 Z)	103407	4
705	CAPSCREW, HEX HEAD (1/2 - 13 X 1-3/4 GD8 Z)	104323	4
706	LOCKWASHER (1/2)	11026	4
707	ELBOW FITTING	25302	1
708	2685008 ELBOW TBG FTG	21163	2
709	REDUCER ELBOW	24236	1
710	HOSE ASSY	13705	2
711	ELBOW-STREET 90DEG	13708	1
712	16113-46 ADAPTER	31284	1
713	SWIVEL TEE	25748	1
714	16445-4 CAP NUT	70182	1
715	HOSE ASSY	13710	1
716	NEEDLE VALVE	25258	1
717	TEE-FEMALE PIPE	23769	1
718	O-RING	10330	1
721	WARNING TAG	25257	1
721	SPACER BLOCK	105245	2
722	O-RING	72101	2
723	CAPSCREW, HEX HEAD (1/2 - 13 X 1-3/4 GD8 Z)	102475	8
724	16146-88 90 MALE ELBOW	70109	2

HYDRAULIC MOTOR GROUP
CH230B EQUIPPED WITH - 01P DRUM
SEAL KIT #75652

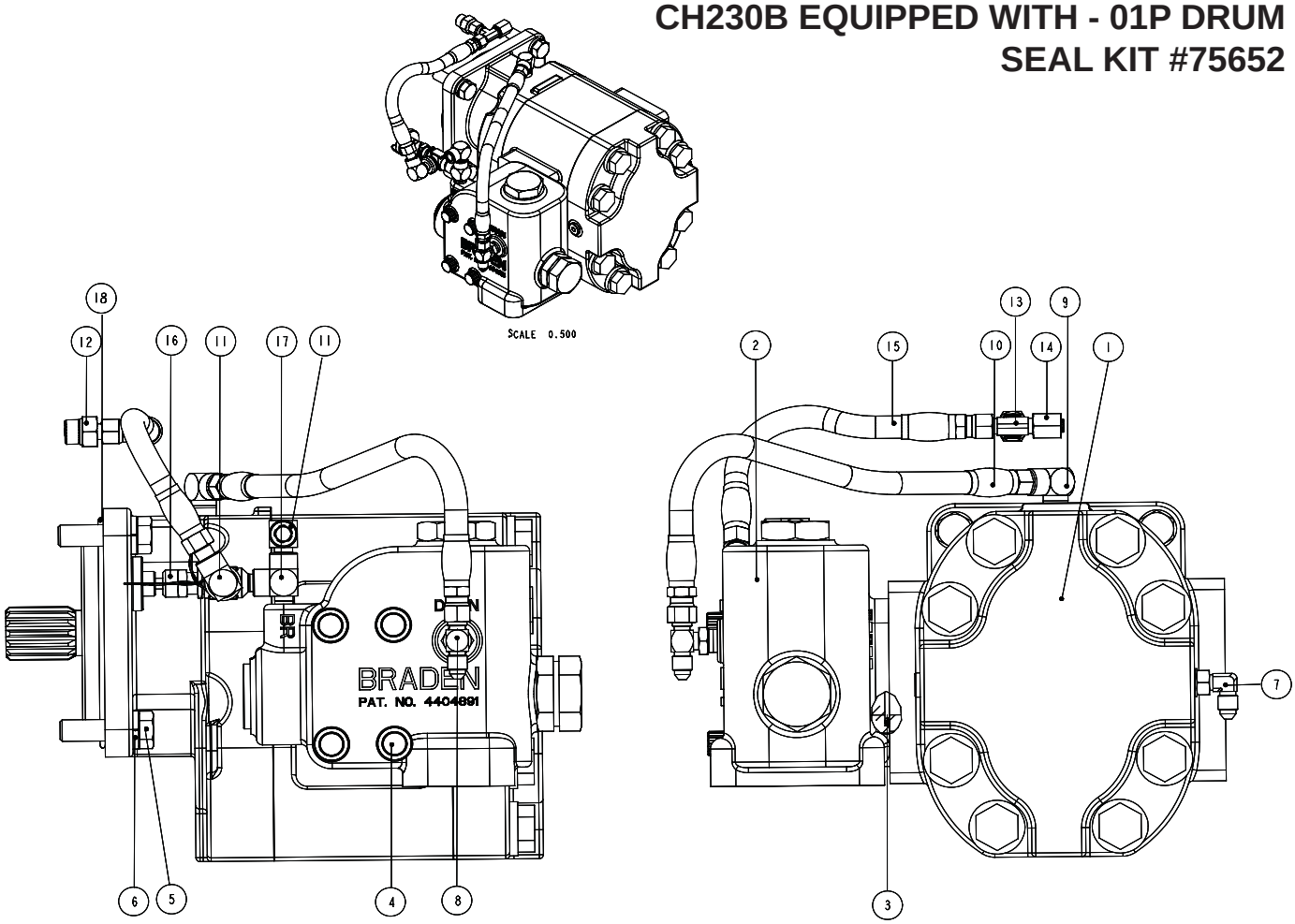

ITEM NO.	DESCRIPTION	PART NO.	QTY.
	HYD MOTOR GROUP	63732	
701	HYD MOTOR WM 76 12.03 CU IN	25274	1
702	1-1/2” BRAKE VALVE ASSY	81609	1
703	O-RING	13542	1
704	CAPSCREW, HEX HEAD (1/2 - 13 X 4-1/2 GD8 Z)	103407	4
705	CAPSCREW, HEX HEAD (1/2 - 13 X 1-3/4 GD8 Z)	104323	4
706	LOCKWASHER (1/2)	11026	4
707	ELBOW FITTING	25302	1
708	TEE, MALE BRANCH	21166	2
709	REDUCER ELBOW	24236	1
710	HOSE ASSY	13705	2
711	ELBOW-STREET 90DEG	13708	1
712	16113-46 ADAPTER	31284	1
713	SWIVEL TEE	25748	1
714	16445-4 CAP NUT	70182	1
715	HOSE ASSY	13710	1
716	NEEDLE VALVE	25258	1
717	TEE-FEMALE PIPE	23769	1
718	O-RING	10330	1

HYDRAULIC MOTOR GROUP
CH165A AND CH230B STANDARD CONFIGURATION
SEAL KIT #75652

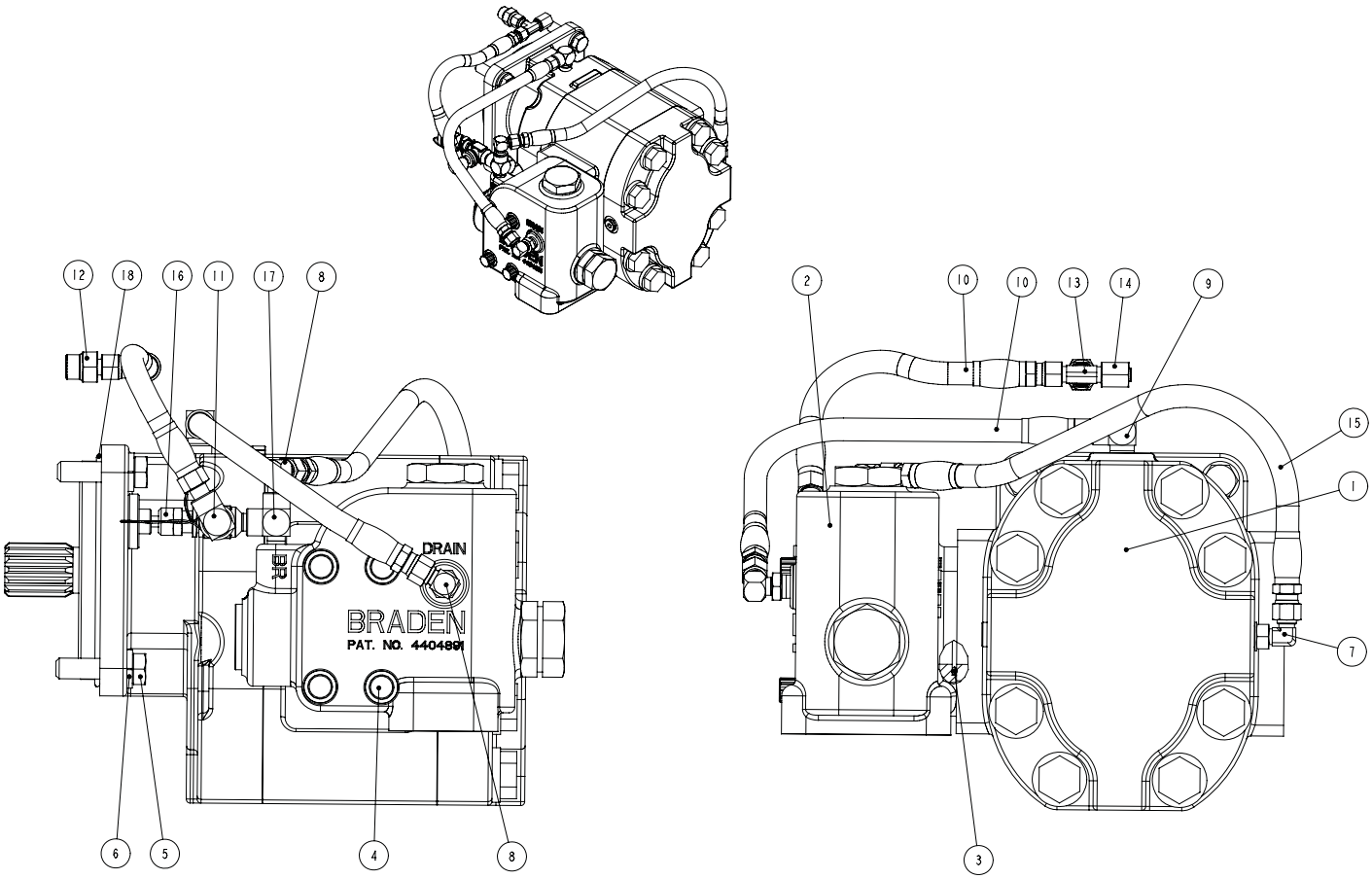

ITEM NO.	DESCRIPTION	PART NO.	QTY.
	HYD MOTOR GROUP	(63721)	
701	HYD MOTOR WM 76 12.03 CU IN	25274	1
702	1-1/2” BRAKE VALVE ASSY	81609	1
703	O-RING	13542	1
704	CAPSCREW, HEX HEAD (1/2 - 13 X 4-1/2 GD8 Z)	103407	4
705	CAPSCREW, HEX HEAD (1-2 - 13 X 1-3/4 GD8 Z)	104323	4
706	LOCKWASHER (1/2)	11026	4
707	ELBOW FITTING	25302	1
708	ELBOW FITTING TBG FTG	21163	2
709	REDUCER ELBOW	24236	1
710	HOSE ASSY	13705	2
711	ELBOW-STREET 90DEG	13708	1
712	16113-46 ADAPTER	31284	1
713	SWIVEL TEE	25748	1
714	16445-4 CAP NUT	70182	1
715	HOSE ASSY	25750	1
716	NEEDLE VALVE	25258	1
717	TEE-FEMALE PIPE	23769	1
718	O-RING	10330	1

HYDRAULIC MOTOR GROUP
CH165A AND CH230B 2-SPEED MOTOR
SEAL KIT #75652

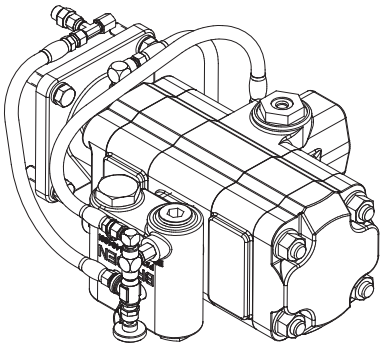

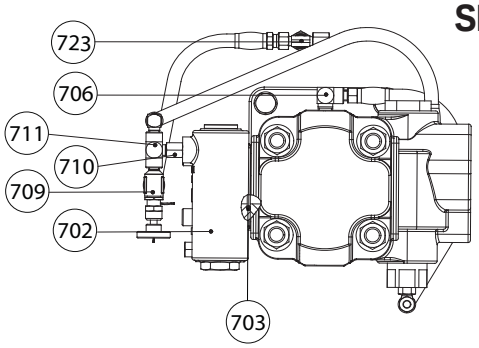

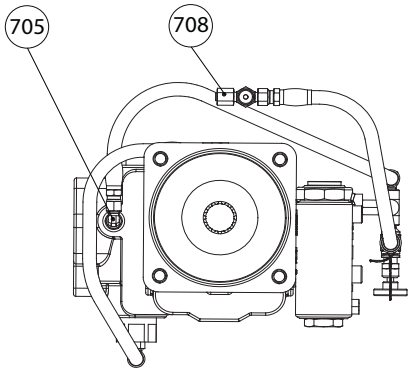

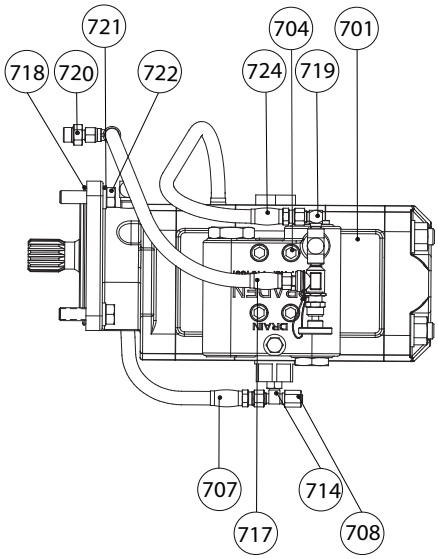

ITEM NO.	DESCRIPTION	PART NO.	QTY.
	HYD MOTOR GROUP	(63724)	
701	HYD MOTOR, 2-SPEED	25651	1
702	BRAKE VALVE ASSY - 1.25-61	81984	1
703	O-RING	13838	1
704	CAPSCREW, HEX HEAD (7/16 - 14 X 3 GD8 Z)	21134	4
705	ELBOW FITTING	25302	1
706	REDUCER ELBOW	24236	1
707	HOSE ASSY	13706	1
708	CAP NUT	70182	2
709	NEEDLE VALVE	25258	1
710	DRAIN CONNECTOR	24784	1
711	TEE - MALE BRANCH	22934	1
714	TEE	29078	1
717	HOSE ASSY	13705	1
718	O-RING	10330	1
719	ELBOW TBG FTG	21163	1
720	ADAPTER	31284	1
721	LOCKWASHER 1/2”	11026	4
722	CAPSCREW, HEX HEAD (1/2 - 13 X 1-3/4 GD8 Z)	104323	4
723	SWIVEL TEE	24748	1
724	HOSE ASSY	25750	1
726	O-RING (NS)	24186	1

BRAKE VALVE GROUP
AUXILIARY BRAKE EQUIPPED ONLY
SEAL KIT #61616

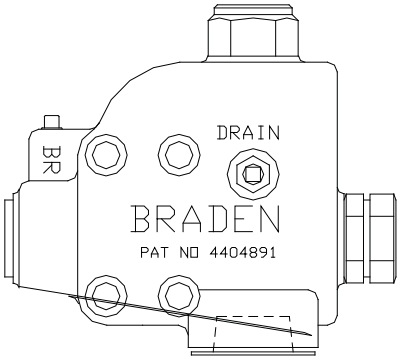

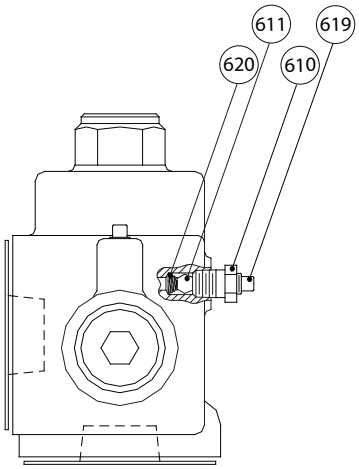

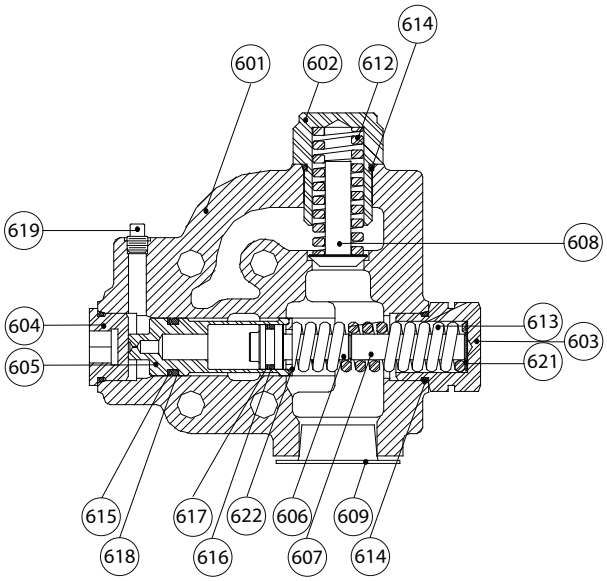

NOTE: BRAKE VALVE PN 83133 MUST BE USED ON CH165 AND CH230 HOIST UNITS EQUIPPED WITH THE BRADEN AUXILIARY BRAKING SYSTEM.

ITEM NO.	DESCRIPTION	PART NO.	QTY.
	1-1/2” BRAKE VALVE ASSY	(83133)	
601	BRAKE VALVE HOUSING	24418	1
602	RELIEF VALVE RETAINER	104384	1
603	SPRING RETAINER	101016	1
604	PLUG	24420	1
605	BRAKE VALVE PISTON	24419	1
606	DAMPER PISTON	24425	1
607	DAMPER PISTON EXTENSION	101017	1
608	BACK PRESSURE POPPET	104379	1
609	SHIPPING PLUG	25036	2
610	REDUCER	24436	1
611	BALL, STEEL	24428	1
612	SPRING, DIE	104385	1
613	MAIN PISTON SPRING	24434	1
614	O-RING	24186	2
615	BACK-UP RING	24778	1
616	O-RING	24776	1
617	BACK-UP RING	24777	1
618	O-RING	21123	1
619	PIPE PLUG	18009	2
620	CHECK SPRING	25373	1
621	SHIM, VALVE SPRING	25662	1
622	SPRING SEAT	101015	1

RACHET AND PAWL

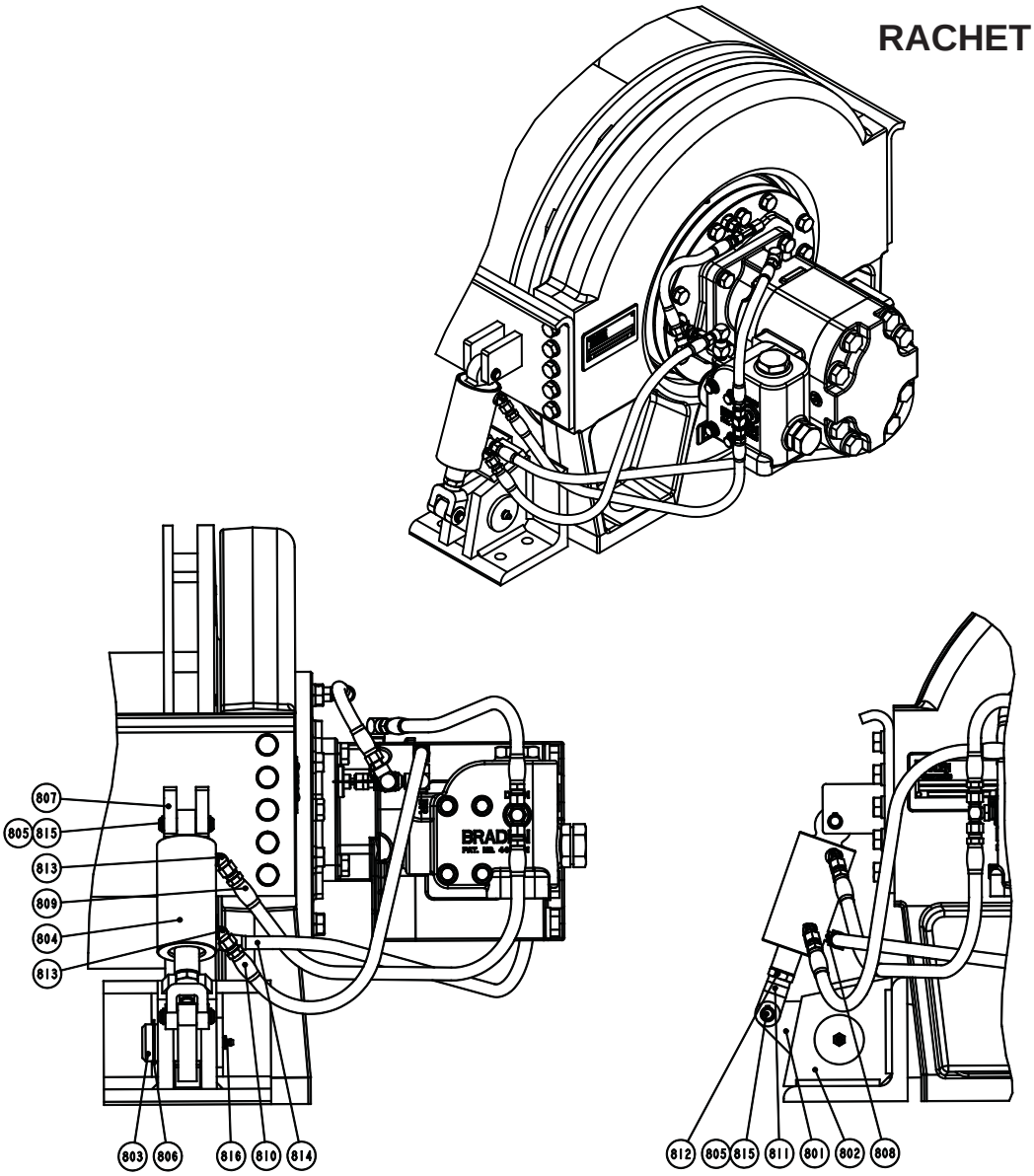

ITEM NO.	DESCRIPTION	PART NO.	QTY.
	RATCHET & PAWL GROUP	(63728)	
801	PAWL ASSEMBLY	81652	1
802	PIVOT BASE	24871	1
803	PIN	24876	1
804	CYLINDER ASSEMBLY	81663	1
805	PIVOT PIN	104153	2
806	21-RD6-1 SNAP RING	12035	1
807	MOUNTING PLATE	52495	2
808	2685008 ELBOW TBG FTG	21163	1
809	HOSE ASSY	72318	1
810	HOSE ASSY	25952	1
811	CLEVIS	24882	1
812	NUT-JAM	18004	1
813	2685010 ELBOW TBG FTG	21165	2
814	HOSE ASSY	100077	1
815	RING, EXTERNAL RETAINING	101082	4
816	GREASE FITTING	18047	1

SEAL KIT #75652

DESCRIPTION	PART NO.	QTY.
O-RING	72097	1
O-RING	72101	1
O-RING	22355	1
O-RING	10467	1
O-RING	72109	1
O-RING	21675	1
O-RING	72110	1
BACK-UP RING	72125	1
BACK-UP RING	72126	1
BACK-UP RING	72127	1
O-RING	72165	1
U-CUP	77337	1

METRIC CONVERSION TABLE

English to Metric			Metric to English		
LINEAR					
inches (in.)	X 25.4	= millimeters (mm)	millimeters (mm)	X 0.03937	= inches (in.)
feet (ft.)	X 0.3048	= meters (m)	meters (m)	X 3.281	= feet (ft.)
miles (mi.)	X 1.6093	= kilometers (km)	kilometers (km)	X 0.6214	= miles (mi.)
AREA					
inches^2 (sq.in.)	X 645.15	= millimeters^2 (mm^2)	millimeters^2 (mm^2)	X 0.000155	= inches^2 (sq.in.)
feet^2 (sq.ft.)	X 0.0929	= meters^2 (m^2)	meters^2 (m^2)	X 10.764	= feet^2 (sq.ft.)
VOLUME					
inches^3 (cu.in.)	X 0.01639	= liters (l)	liters (l)	X 61.024	= inches^3 (cu.in.)
quarts (qts.)	X 0.94635	= liters (l)	liters (l)	X 1.0567	= quarts (qts.)
gallons (gal.)	X 3.7854	= liters (l)	liters (l)	X 0.2642	= gallon (gal.)
inches^3 (cu.in.)	X 16.39	= centimeters^3 (cc)	centimeters^3 (cc)	X 0.06102	= inches^3 (cu.in.)
feet^3 (cu.ft.)	X 28.317	= liters (l)	liters (l)	X 0.03531	= feet^3 (cu.ft.)
feet^3 (cu.ft.)	X 0.02832	= meters^3 (m^3)	meters^3 (m^3)	X 35.315	= feet^3 (cu.ft.)
fluid ounce (fl.oz.)	X 29.57	= millileters (ml)	milliliters (ml)	X 0.03381	= fluid ounce (fl.oz.)
MASS					
ounces (oz.)	X 28.35	= grams (g)	grams (g)	X 0.03527	= ounces (oz.)
pounds (lbs.)	X 0.4536	= kilograms (kg)	kilograms (kg)	X 2.2046	= pounds (lbs.)
tons (2000 lbs.)	X 907.18	= kilograms (kg)	kilograms (kg)	X 0.001102	= tons (2000 lbs.)
tons (2000 lbs.)	X 0.90718	= metric tons (t)	metric tons (t)	X 1.1023	= tons (2000 lbs.)
tons (long) (2240 lbs.)	X 1013.05	= kilograms (kg)	kilograms (kg)	X 0.000984	= tons (long) (2240 lbs.)
PRESSURE					
inches Hg (60 °F)	X 3600	= kilopascals (kPa)	kilopascals (kPa)	X 0.2961	= inches Hg (60°F)
pounds/sq.in. (PSI)	X 6.895	= kilopascals (kPa)	kilopascals (kPa)	X 0.145	= pounds/sq.in. (PSI)
pounds/sq.in. (PSI)	X 0.0703	= kilograms/sq.cm. (kg/cm^2)	kilograms/sq.cm. (kg/cm^2)	X 14.22	= pounds/sq.in. (PSI)
pounds/sq.in. (PSI)	X 0.069	= bars	bars	X 14.5	= pounds/sq.in. (PSI)
inches H_2O (60°F)	X 0.2488	= kilopascals (kPa)	kilopascals (kPa)	X 4.0193	= inches H_2O (60°F)
bars	X 100	= kilopascals (kPa)	kilopascals (kPa)	X 0.01	= bars
POWER					
horsepower (hp)	X 0.746	= kilowatts (kW)	kilowatts (kW)	X 1.34	= horsepower (hp)
ft.-lbs./min.	X 0.0226	= watts (W)	watts (W)	X 44.25	= ft.-lbs./min.
TORQUE					
pound-inches (in.-lbs.)	X 0.11298	= newton-meters (N-m)	newton-meters (N-m)	X 8.851	= pound-inches (in.lbs.)
pound-feet (ft.-lbs.)	X 1.3558	= newton-meters (N-m)	newton-meters (N-m)	X 0.7376	= pound-feet (ft.-lbs.)
pound-feet (ft.-lbs.)	X .1383	= kilograms/meter (kg-m)	kilogram/meter (kg-m)	X 7.233	= pound-feet (ft.-lbs.)
VELOCITY					
miles/hour (m/h)	X 0.11298	= kilometers/hour (km/hr)	kilometers/hour (km/hr)	X 0.6214	= miles/hour (m/h)
feet/second (ft./sec.)	X 0.3048	= meter/second (m/s)	meters/second (m/s)	X 3.281	= feet/second (ft./sec.)
feet/minute (ft./min.)	X 0.3048	= meter/minute (m/min)	meters/minute (m/min)	X 3.281	= feet/minute (ft./min.)

TEMPERATURE

°Celsius = 0.556 (°F - 32) °Fahrenheit = (1.8 X °C) +32

COMMON METRIC PREFIXES

mega	(M)	= 1,000,000 or 10^6	deci	(d)	= 0.1 or 10^{-1}
kilo	(k)	= 1,000 or 10^3	centi	(c)	= 0.01 or 10^{-2}
hecto	(h)	= 100 or 10^2	milli	(m)	= 0.001 or 10^{-3}
deka	(da)	= 10 or 10^1	micro	(m)	= 0.000.001 or 10^{-6}

LIT2291 R7
September 2019
Printed in USA

***PACCAR* Winch**
800 E. Dallas Street
Broken Arrow, OK 74012
www.paccarwinch.com

Copyright 2019 PACCAR Inc.
All rights reserved