BP200C Planetary Winch

20,000 lb (9,072 kg) Rated Line Pull

Features & Benefits

- Active level wind system for efficient cable spooling
- Adjustable low-drag free spool system for pulling cable manually
- Two-speed motor for low speed torque and feathering control as well as high speed operation
- Sprag clutch eliminates fallback during reel out operations
- Reduced heat generation during long continuous duty pulls
- Available with or without drive shafts for versatility (3 length options)
- Underwound and overwound cable configurations available

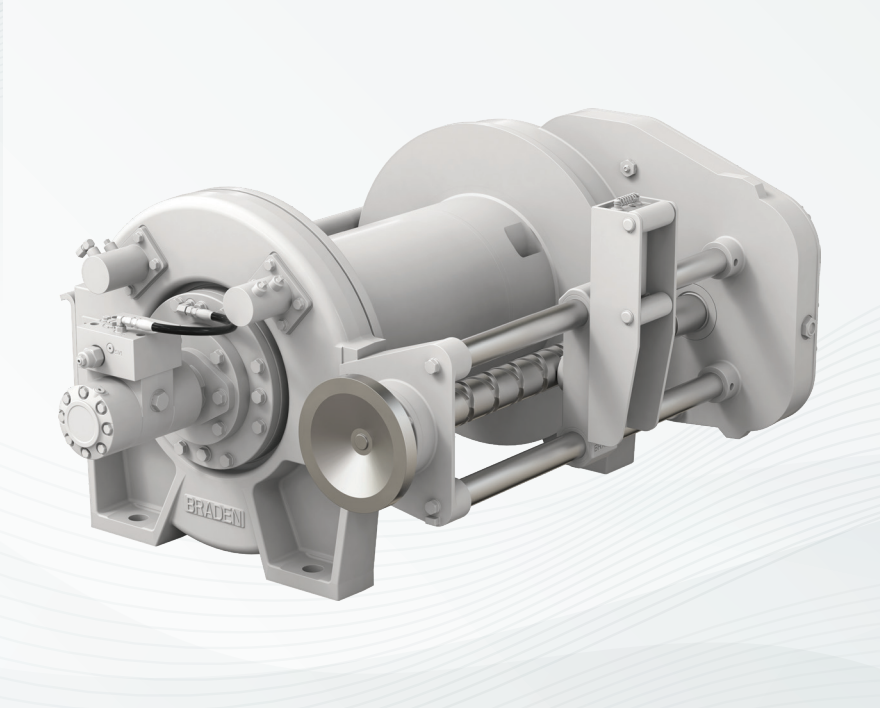

The BP200C is designed to deliver power and control for underground cable pulling and tower erection applications. Motor, gearing and braking systems have been improved for better performance. The active level wind system prevents rope from kinking, backlashing and bird nesting.

Gear Ratio	36:1
Unit Weight	1,750 lb (794 kg)
Motors	2-Speed Motor for Winching; Gear Motor for Hoisting
Drum Size	12.75" (324 mm) Barrel x 22.75" (578 mm) Flange x 24" (610 mm) Between Flanges
Rope Diameters	3/8" (10 mm), 7/16" (11 mm), 1/2" (13 mm), 9⁄16" (14 mm), 5/8" (16 mm)
Rope Storage	1,537 ft (468 m) for 9/16" (14 mm) Rope

Specifications are representative of common configuration. Consult factory for additional options.



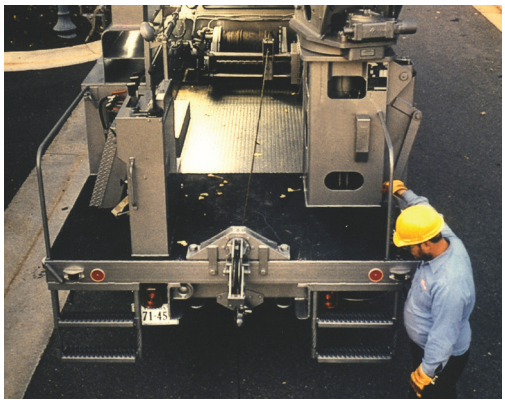

Applications

- Underground Cable Pulling
- Tower Erection

800 East Dallas | Broken Arrow, OK 74012
www.arrowheadwinch.com | 918.251.8511
LIT2869_R2_02-2025 (PB) ©2025 Arrowhead Winch Inc

BP200C Planetary Winch

20,000 lb (9,072 kg) Rated Line Pull

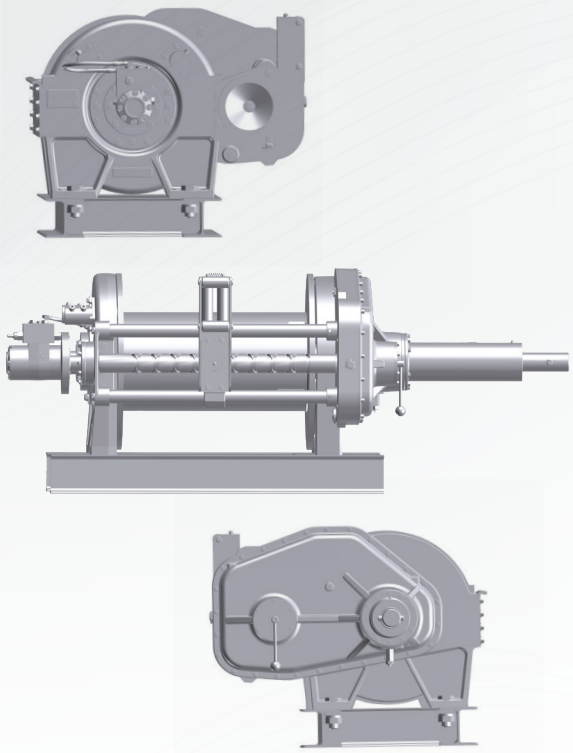

Performance

Low Speed Winching (BP200C-36176/088-9/16-46)	Layer 1	Layer 2	Layer 3	Layer 4
Line Pull*	20,000 lb (9,072 kg)	18,440 lb (8,364 kg)	17,100 lb (7,756 kg)	15,950 lb (7,235 kg)
Line Speed*	34 fpm (10 mpm)	37 fpm (11 mpm)	40 fpm (12 mpm)	43 fpm (13 mpm)

High Speed Winching (BP200C-36176/088-9/16-46)	Layer 1	Layer 2	Layer 3	Layer 4
Line Pull*	9,900 lb (4,491 kg)	9,120 lb (4,137 kg)	8,460 lb (3,837 kg)	7,890 lb (3,579 kg)
Line Speed*	45 fpm (14 mpm)	49 fpm (15 mpm)	53 fpm (16 mpm)	57 fpm (17mpm)

**Based on max pressure of 2,500 psi, 30 gpm, 36:1 gear ratio and 9/16" (14 mm) rope. Performance will vary dependent on hydraulic system, motor, drum and cable sizes.*

Dimensions

Additional technical information available at www.paccarwinch.com.

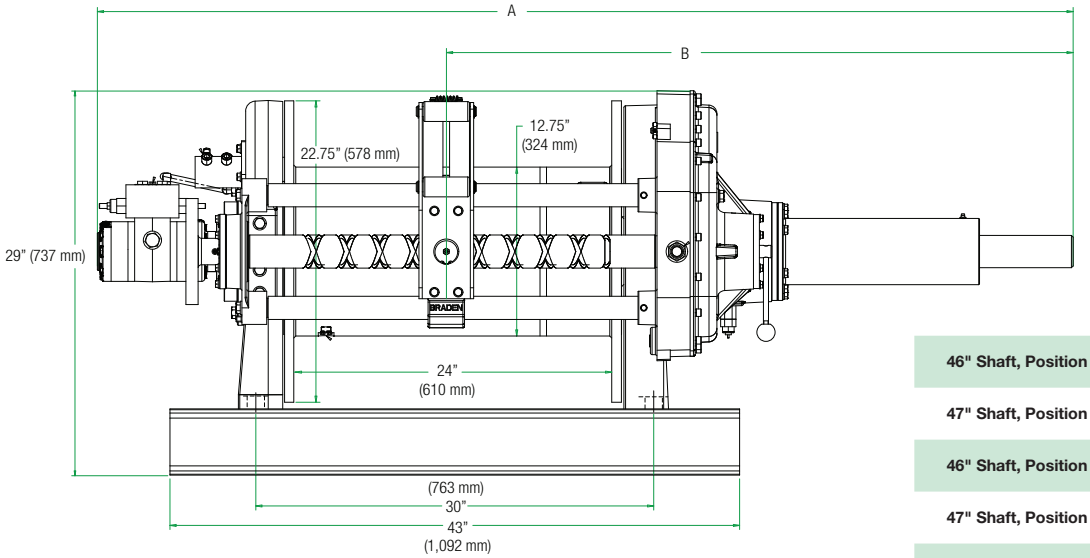

	A	B
46" Shaft, Position 1	70.66" (1,795 mm)	44.32" (1,126 mm)
47" Shaft, Position 1	71.66" (1,820 mm)	45.32" (1,151 mm)
46" Shaft, Position 2	72.66" (1,846 mm)	46.32" (1,177 mm)
47" Shaft, Position 2	73.66" (1,871 mm)	47.32" (1,202 mm)
50" Shaft, Position 1	74.66" (1,896 mm)	48.32" (1,227 mm)

800 East Dallas | Broken Arrow, OK 74012
www.arrowheadwinch.com | 918.251.8511
LIT2869_R2_02-2025 (PB) ©2025 Arrowhead Winch Inc